IR-Remote Controls Repair

Autor:
Data de publicació: 17-07-2016

Notes on the Troubleshooting and Repair of Hand Held Remote Controls
Version 3.20 (17-Oct-08)
Copyright © 1994-2013
Samuel M. Goldwasser
--- All Rights Reserved ---

For contact info, please see the Sci.Electronics.Repair FAQ Email Links Page.

Reproduction of this document in whole or in part is permitted if both of the following conditions are satisfied:

This notice is included in its entirety at the beginning.
There is no charge except to cover the costs of copying.

Table of Contents

Preface

Author and Copyright
DISCLAIMER

Introduction

Remotes, Remotes, and More Remotes

IR Remote Diagnosis and Repair

Safety
Testing of Remotes
Diagnosing the Problem
Remote Operating Range
Remote Repair
Problems with Remotes

Dead Batteries or Batteries Inserted Incorrectly
Corroded Battery Contacts

Broken or Intermittent Contacts
Broken Ceramic Resonator
Dirt, Spills, Gunk, Oily Buildup Inside
Worn or Corroded Pads on Circuit Board
Worn Conductive Material on Rubber Buttons
Cracked Circuit Board
Bad IR LED
Bad IC
Dead Memory Capacitor

Alternatives to Repair
Original Replacement Remotes

Problems Not Due to a Defective Hand Unit

Problems with the Equipment
Problems Due to Interference
Where Multiple Pieces of Equipment Use the Same Codes
Forgot Your Universal Remote Setup?
Code search Programming of RCA SystemLINK Remote Controls

IR Items of Interest

Increasing the Range of a Remote Control or IR Data
Remote Remotes (Remote Extenders)
Controlling TVs, VCRs, CDs, etc., From a PC
IR Signal Transmission and Coding
Capturing Remote Control Codes
Links to IR Related Web Sites

IR Detector and Related Circuits

IR Detector Circuits

IR Detector Circuit Using Bare Photodiode
IR Detector Circuit Using IR Receiver Module

Steve's Instant IR Tester
Some Alternative 'Quick and Dirty' Remote Testers

Back to IR Remote Repair FAQ Table of Contents.

Back to IR Remote Repair FAQ Table of Contents.
Preface
Author and Copyright
Author: Samuel M. Goldwasser
For contact info, please see the Sci.Electronics.Repair FAQ Email Links Page.

Copyright © 1994-2013
All Rights Reserved

Reproduction of this document in whole or in part is permitted if both of the following conditions are satisfied:

1. This notice is included in its entirety at the beginning.
2. There is no charge except to cover the costs of copying.

DISCLAIMER
While it is hard to imagine any catastrophic consequences resulting from attempting to repair a remote control, we will not be responsible for such consequences or collateral damage should it occur! :)

Back to IR Remote Repair FAQ Table of Contents.
Introduction
Remotes, Remotes, and More Remotes
Twenty years ago, a wireless remote control was a $50 or $100 option (in 1980 dollars) to a TV or VCR. Early remote controls used ultrasound or radio frequency analog transmission and could perform only limited functions - you were lucky to get anything beyond on/off, volume, and channel up/down. Today, a remote control is standard with even the lowest cost basic electronic equipment. Nearly all modern remote controls use Infra Red (IR) light for digital data transmission. Some have more buttons and functions than a personal computer! Unfortunately, many have row upon row of tiny identical size buttons with no logical layout of functions. Others are a masterpiece of ergonomic engineering almost operating by themselves.
There are two kinds of problems with remotes:

1. They seem to have legs of their own and disappear at the most inconvenient times.

2. They get abused by being dropped, dunked in Coke or beer, chewed on by the pet tiger, or left alone to develop dead leaky batteries.

While there are some remotes that will respond to a whistle and beep back to identify their location, most are the ordinary deaf, dumb, and blind variety. I cannot help you locate your missing remotes. If you have disappearing remote syndrome, a well designed universal remote - on a tether - may make a good investment. However, the following was too good to pass up:

(From: Bill Samuel (phantom@isoc.net).)

"In '89, a Customer brings in their VCR for me to fix. (Zenith VRE-200) It won't accept tapes, plus their kids misplaced their remote, so they wanted a price on a new one.

Well, after taking the unit apart, I called them and said, "Sir, I've found the problem with your VCR. BTW, you don't need a new remote.""

Most actual problems with remotes can be solved relatively easily. They are often of a physical nature. Since remotes operate on low voltages under non-stressful conditions, spontaneous electronic failure is relatively uncommon. The following are not good for remotes: Sitting or stepping on them, using them as drink stirrers, door stops, projectiles for target practice, substitutes for dog bones, or depositories for your old leaky batteries.

Back to IR Remote Repair FAQ Table of Contents.

IR Remote Diagnosis and Repair

SAFETY

There isn't anything dangerous inside a remote hand unit. Even staring point blank into the IR emitter isn't likely to harm anything. The worst that will happen if you make a mistake is that the circuit will be damaged beyond beyond repair and a new remote control will be in your future! :)

However, if you go inside the TV, VCR, or other controlled device, see the respective repair guide for that equipment for essential SAFETY information.

Testing of Remotes

Unless your remote hand unit has been run over by a bulldozer and is flat as a pancake, don't immediately assume it is actually broken.

First, confirm that your problem is not simply due to a selector switch in the wrong position or an accidental press of a key selecting 'VCR' instead of 'TV'.

If your 'problem' unit is a universal type, make sure it has not simply forgotten its programming or codes - reinitialize it. A common cause of memory loss is the batteries falling out or losing contact for an instant due to a fall or bump. To be sure it is properly reset, remove the batteries for a minute or so and also press the power button for a few seconds (to discharge any internal capacitors) before doing the reprogramming. See the section: Forgot Your Universal Remote Setup?.

Some older TVs in particular may have a 'vacation' or other switch to disable the set (or just the remote functions). For that matter, if you cannot get the equipment to turn on at all, make sure it is plugged into a live wall socket. :-)

Some TVs may occasionally become confused due to a power surge or for no good reason at all. Unplug the TV for a few minutes to reset it. It is also possible (though I don't have any evidence of this) that a remote can become confused. See the note above on programmable remotes.

Before doing anything else, check and/or replace the batteries with fresh ones. Who knows how long they have been in there.

Don't ignore the possibility that your spouse (or the local poltergeist) accidentally dropped the remote spilling the batteries - and put some back in backwards! This could result in either a totally non-functional remote, weak (limited range), or erratic operation. Permanent damage is not that likely but possible with some designs if the resulting voltage to the circuit board actually had reverse polarity.

Next, try to determine whether the problem is indeed in the remote itself and not the TV, VCR, CD, or other controlled equipment. The easiest way to do this is to temporarily program a universal remote to match your equipment. If this now operates successfully, then you can be pretty certain that the problem lies in the remote unit.

If you are not able to get a universal remote to operate your equipment, then either you have not found the proper code setting or the remote itself is indeed faulty (or you don't have a universal remote!).

Should you or a friend have an identical or nearly identical piece of equipment, try the (faulty) remote on that (and its remote on your equipment) as a further test.

If you have multiple pieces of equipment, make sure you have not accidentally substituted an apparently identical remote for a slightly different model VCR, for example. Not all equipment - even of similar type - from the same manufacturer necessarily use the same signal transmission format.

Diagnosing the Problem

The following assumes that there is no response to the hand-unit even if up close to the TV, VCR, or other controlled equipment. Where the remote works but only over a shorter distance than when new, see the section: Reduced Operating Range.

To narrow down the problem, use an IR detector to determine if the remote is emitting an IR signal when each button is pressed. While this does not guarantee that the signal is correct, it eliminates most common problems from consideration. An IR detector card or an IR detector circuit like one of those described in the section: IR Detector and Related Circuits are very handy for testing remote controls and other IR emitters. Some camcorders, video cameras, digital cameras, security cameras, Web cams, and even cell phone cams are sensitive to IR as well and will show a bright spot of light if aimed at a working source of IR. However, since many of these have an IR-blocking filter, a negative response is not definitive unless you confirm that the camera responds to a known working remote. And, PCs and PDAs with IR links and suitable software (e.g., OmniRemote for the Palm III) may be useful for remote testing. See the section: Some Alternative 'Quick and Dirty' Remote Testers for additional options.

MCM Electronics, Centerville, Ohio/1-800-543-4330, list 2 different shaped cards for $7.29 each (#72-005/3.5 x 2.5" card & 72-003 /4.75 x 0.75" probe. Radio Shack, Edmund Scientific, and others offer similar detectors.

The salvaged IR sensor module from a TV or VCR may also be used as an IR detector. These usually operate from a single supply (12 V typical) and output a clean demodulated signal - you will not see the carrier, only the 1s and 0s. This will be true of an IR detector circuit as well unless you are careful to position the remote and photodiode just so as the circuit acts as somewhat of a low pass filter due to the B-E capacitance of the transistor. Radio Shack and Digikey (among other) also sell inexpensive IR receiver modules (under $5) which would also provide a demodulated signal for your viewing pleasure. However, note that some may be tuned for a particular carrier frequency like 40 kHz and therefore may not respond to all remotes. (Note, I have heard of spurious pickup issues with some of the Radio Shack units - they are not the same as those sold a while ago.)

(From: Brett Walach (bwalach@dpg.devry.edu).)

For anyone needing a great IR receiver at a reasonable price, try Radio Shack's MOD1. It's an IR receiver that demodulates the data for 40Khz x-mitters. The output can then be viewed on a scope or used to drive a small transistor which would in turn drive a speaker! The output from the MOD1 is the inverse of the code sent. That is, the TTL logic level from the MOD1 is high when no IR is present. If by chance you need an IR receiver that operates on a different carrier, try DigiKey (1-800-DIGI-KEY). I know that they have the other two types for sure.

Reduced Operating Range

With proper design, there really shouldn't be anything in a remote control (or the receiver) that degrades with reasonable use (at least in terms of operating distance). However, not all remote controls are properly designed (or manufactured) and there can be other causes for a remote that used to operate reliably from the other end of the house or bounced off the far wall but now won't even respond directly from a few feet away:

Weak batteries - replace them!

Dirt, gunk, tobacco smoke or cooking grease residue, and other coatings on the windows of the hand-unit or receiver. Clean thoroughly (but gently) with detergent and water, and alcohol, as required. This may mean INSIDE as well as outside!

Damaged window in hand-unit or receiver. If someone attempted to clean the window with sandpaper, there could be

problems. Remove, replace, or polish the damaged area.

Weak IR LEDs. Since these are driven hard, it is possible for them to degrade over time. Replace with high intensity IR LEDs from Radio Shack or a real electronics distributor and see if that helps.

Dried out reservoir capacitor. To drive the IR LEDs requires large peak currents. Sometimes, this depends on the input capacitor fed from the battery and not the battery itself. If this capacitor goes bad, the peak output will be greatly reduced or will be erratic. Test and/or just replace all electrolytic capacitors in the hand-unit.

Remote Repair

Most problems can be remedied without any special skills. However, where bad connections or component replacement is involved, you will have to be able to do just a bit of fine soldering. In this case, a low power (e.g., 25 W) fine tip soldering iron and fine rosin core solder will be needed. Fortunately, the circuit boards in remotes are generally constructed using features sizes (pads and lines) that are state-of-the-art from the 1950s. Therefore, rework isn't nearly as challenging as, say, on your 500 MHz PC!

CAUTION: You can easily turn a simple repair (e.g., bad solder connections) into an expensive mess if you use inappropriate soldering equipment and/or lack the soldering skills to go along with it. If in doubt, find someone else to do the soldering or at least practice, practice, practice, soldering and desoldering on a junk circuit board first! See the document: "Troubleshooting and Repair of Consumer Electronic Equipment" for additional info on soldering and rework techniques.

Test equipment beyond a good eye and maybe a multimeter is rarely needed.

The most challenging part of repairing a remote hand unit may be just getting inside! Manufacturers seem to pride themselves on the extent to which this is becoming more nearly impossible without dynamite:

Screws - Some well designed (from the point of view of repair) units have a screw or two in obvious places (back cover and/or inside the battery compartment). Once removed (generally with a proper fine tipped Philips blade screwdriver), the two halves of the case come apart, possibly after sliding one with respect to the other a fraction of an inch.

Hidden snaps - If no screws are visible (and even after removing them in some cases), it will be necessary to carefully examine the seam and possibly inside the batter compartment to determine where the likely locations of plastic snaps. Running a butter knife or similar thin tool along the seam may persuade the unit to pop in half.

Glue - I don't know if any remote controls use this more-or-less permanent approach but if so, careful use of a hacksaw may be necessary. :-(

Even if the case is slightly damaged after disassembly (e.g., a snap or two break off), the sparing use of a semi-permanent adhesive like windshield sealer will probably be able to fasten it all back together in such a way that little evidence remains of its traumatic experience.

Problems with Remotes

Most problems occur in the hand units due to the abuse inflicted on them by kids, pets, and even otherwise well behaved adults. However, the equipment or even outside interference can also be at fault. Therefore, also see the sections: Problems with the Equipment and Problems Due to Interference.

The following are the most common types of problems and suggested solutions. As noted, most are physical in nature: dead batteries, gunk, bad connections.

For all but the first two, disassembly will be required. Manufacturers seem to be using more and more creative (read: obscure and difficult to open) methods of fastening the two halves of the remote shell together. There may be a screw or two and/or the case may simply 'crack' in half by gently prying with a knife or small screwdriver along the seam or sliding the two halves a fraction of an inch to unlock some catches. Look for screws on the back (possibly under a not-so-easy

to peel off label) and inside the battery compartment, as well as hidden snap fasteners.

Dead Batteries or Batteries Inserted Incorrectly
Solution obvious. If batteries tend to go dead quickly - the batteries in a remote typically last years - then you may have a stuck button, some conductive grime under one of the buttons, or a defective IC - or you may be using cheap batteries.
Make sure that all the batteries point in the correct direction as marked inside the battery compartment or under its cover. If it uses more than 2 batteries, getting one in backwards could also result in weak or erratic operation.

Corroded Battery Contacts
Clean off the chemical deposits - first dust out the dried material with a soft brush and then remove the remainder with a damp lint free cloth or paper towel. Polish the contacts with a Fiberglass brush and/or pencil eraser and/or very fine sandpaper or a nail file. If there is evidence that the battery juice made its way inside the case, you will need to open the remote and thoroughly clean the interior. Additional repairs may be needed if damage to wiring, components, or circuit board traces is evident.
Broken or Intermittent Contacts
There are most often between the battery connections and the circuit board. Carefully resolder and reinforce them if necessary. There could also be cracked solder joints on various component pins (particularly those that get abused like switches) as well. Reflow the solder on any suspect joints.
In addition, check selector, power, or enable) switches for proper operation. Remove the batteries and use an ohmmeter to test across the contacts with the switch(es) in all positions. These switches can be easily damaged as a result of dropping or squashing the remote. The contacts may become dirty, gunked up, corrode, or simply wear out as well. Locating a replacement may prove challenging. Disassembling the switch may allow you to clean or restore the contacts in some cases.

Broken Ceramic Resonator
These may fail from shock when remotes are dropped.
The frequency is often 455 kHz (I assume since they are widely used as filters in the IF section of AM radios and are thus inexpensive.)

If you have an oscilloscope, check for signals on the IC when buttons are pressed - if there is no action on any pin, then you may have a bad resonator (or bad IC, etc.). Monitoring on one lead of the ceramic resonator should produce a signal at its resonant frequency when a button is pressed. A typical waveform may have an amplitude of a few tenths of a volt.

If you do not have a scope, one possible indication of a bad resonator (aside from it being smashed) would be a steady output from the IR LED for all button presses - normally the output would be visibly pulsating. Of course, this could indicate a bad IC as well.

A ceramic resonator usually is a small blue or orange object that looks similar to a plastic (sharp edges) or dipped (smooth edges) capacitor.

The circuit board marking will be X1 or CR1 or something like that. Replacements may be available from places like MCM Electronics or other electronics distributors. Or, consider an organ donation from a remote for equipment that has long since gone to that entertainment center in the sky if the frequency of its resonator is the same.

However, the frequency may be fairly critical for proper operation (within 5 percent or better may be required for some) and while not a common failure, I've heard of the resonator frequency changing (probably from a trauma) by enough to cause problems.

(From: Lewin A.R.W. Edwards (sysadm@zws.com).)

If your resonator has 3 pins instead of 2, and you can't find a replacement, you can use a 2-pin resonator, but you'll need to add two small caps (perhaps 33 pF?) between the legs of your resonator and ground.

Dirt, Spills, Gunk, Oily Buildup Inside
This may cause circuit problems preventing keys from operating reliably or physical problems resulting in keys being just plain stuck or sticky. Unreliable or erratic operation from these causes is probably the most common remote control problem after dead batteries.

If you have recently cleaned the outside with a wet or damp cloth (or in your dishwasher!), then this is quite likely as liquid can seep inside and result in all sorts of strange behavior immediately or delayed by some time.

Disassemble completely and wash both sides of the rubber membrane keypad, circuit board, and plastic case with water (and mild detergent if necessary) to remove sugar based grime and then isopropyl alcohol. Dry thoroughly.

For stubborn crud, a pencil eraser and/or Fiberglass brush may be used with care (on the circuit board only). However, the gold plating (if present) and/or copper trace itself is quite thin!

Where you find a oily film between the rubber and the circuit board, unless you really do a SUPER job of cleaning, it will come back quickly. It may come back no matter what you do.
Once you think you got it all, do it again - and with soap and water as well - both the rubber and circuit board.

This goo may originate from a number of sources (no one seems to know for sure) including: body oils, spills, plasticizers from the flexible keypad, protective grease, etc. Unless you had dunked the remote in a vat of motor oil to create this problem there may be no sure way to prevent it from returning in the future. More below.

CAUTION: In some cases, the conductive black material may be soluble in alcohol - carefully test first on the pad of a key you don't care much about. If black material comes off on your cloth or swab, use only the water and detergent. Putting the black stuff back on is much more difficult than removing it. :-)
I have one (1) data point to suggest that cleaning the rubber pad with a soft pencil eraser may be better than washing. However, this may also remove the conductive material in some units.

(From: Steve Lenaghan (tamerica@prairie.ca).)

We do a ton of cordless phones and I have never had to repair a conductive pad in my career (35 years). We soak them in scalding water and dish soap for 30 minutes. I clean the PC boards with alcohol and a rough cloth. Works every time.

(From: Michael Shell (mikes1987@yahoo.com).)

People have noticed that the keys (and remotes) that are used more often, tend to have more oil problems. This is in agreement with my observations.

One thing I have to make clear is that I *KNOW* that whatever is going on is NOT due to spillage or other external contamination. If I had not seen it with my own eyes, I would not believe it either! Sometimes the keys that are used most often (and have the most oil) are in the center - this is a LONG way for an external contaminant to have to travel!

The oil behaves a bit differently from most normal household (and hand) oils.

It is not sticky in the least
It is VERY clear.
It is VERY hydrophobic and detergent action is noticeably less than with most petroleum based oils.

I would not have noticed these fine points except for the fact that I have worked with Silicone (DOT 5) brake fluid which, except for an added purple dye, behaves in the same way.

So, it seems the silicone keypad manufacturers have been keeping a dirty little secret all these years!

I guess we all have to look forward to our 3 year cleaning ritual. I suppose a hardcore hardware hacker could do his own keypad baking and post some before and after weight measurements to tell us how many grams of oil these things hold! (WARNING: you may have to do the baking in an oxygen free atmosphere!)

Worn or Corroded Pads on Circuit Board
These may be interdigitated or semi-circular patterns and suffer from both wear and corrosion. Conductive Epoxy or other similar conductive paint (like that used for rear window defogger repair) or ink may be used for repair. A piece of thin copper foil can be glued to the circuit board and soldered to the appropriate circuit trace. (Gold foil would be better as it will not corrode but might be just a tad pricey for a $10 remote!)
If the plating has worn off and cleaning the contacts doesn't last for more than a few days or weeks, tinning them with a thin coating of solder should help.

Worn Conductive Material on Rubber Buttons
Compare the bottoms of frequently used keys with those that are rarely pushed. If you can see the rubber through the conductive material after cleaning, the pad is likely worn to the point of being non-functional. This may be repaired with conductive Epoxy or other similar conductive paint or ink. A sliver of aluminum foil can sometimes be glued to the rubber surface. 3M makes EMI/RFI foil shielding tape, type 1181, that should work very well for this. Another source for small quantities of metal tape would be a shop that makes stained glass or sells supplies for making it. Pencil lead (graphite) may also work though for how long is unknown (though some have reported good success with this readily available material).
MCM Electronics at 1-800-543-4330 lists a Rubber Keypad Repair Kit for $24.95. It is supposed to contain enough material to repair 400 contacts (2 containers each good for 200 contacts). Their part number is 20-2070. Not cheap but 400 contacts covers quite a few typical remotes. Note: I do not know whether it is easy to mix only enough material for just 1 or 2 contacts - it would be worth confirming that this is possible before ordering. Or else, invite a few dozen friends (and their flakey keypads) over for a remote repair party. :-)

For a similar price, Remote Control Keypad Repair also has a kit for coating the worn out rubber. It consists of a little bottle of some conductive paint which doesn't appear to need mixing.

There is also a material called 'resistive coating' or something like that that goes on like paint. It may be available from an electronics distributor. Or, if you are friendly with your local repair shop, they may be willing to spare a few drops.

Occasionally, the conductive material is not actually worn off entirely only on the surface and there may still be some beneath surface. Light sanding may help.

Unfortunately, there is no single best solution since the material used for the conductive rubber pads in remotes is not all the same.

(From: Paul Weber (webpa@aol.com).)

"If you're looking for aluminum or copper foil tape with adhesive on it, visit your local hardware store, in the plumbing and/or roof rain gutter sections. Alternatively, try an auto parts store. I've found a variety of adhesive foils (including stainless steel) in these kinds of establishments.
As for as repairing conductive rubber keypads: I've not used the metal tape method, but will probably try it. I've had great success with a thorough cleaning and light buffing of the contact area with very find (1000 grit) wet/dry sandpaper."

(From: Rufus (Pink@Floyd.Edu).)

"If you can find similar pads on another remote's membrane, trim them off square and use them to replace the defective pads. You can use silicone glue to attach them. Be careful to trim off the same amount from each pad so the buttons throw will be the same, and don't trim too deep as to damage the rubber dome."
(From: Wes Hilterbrand (replayelectronics@usa.net).)

"About the best way I have found is to take an old remote (trash or have absolutely no need for) with the same type of conductive pads. Look for a little used pad (such as a record button), add some skillful maneuvering with an exacto knife, and some SuperGlue, and you can sometimes replace the bad pad(s) on your remote with better pads. The way I have done this is to cut the pad about halfway down from the sheet it's connected to (around the pad's circumference, a little ways under the conductive surface). This should probably be done only as a last resort, and WATCH YOUR FINGERS!
BTW, this is just my opinion. I CANNOT be held responsible for any damage incurred due to following this procedure. Try this AT YOUR OWN RISK! Remember, if you mess up your working remote, there is no recourse."

(From: Keith Craig (kcraig@mlode.com).)

"I use a can of 'TV TUBE COAT' (GC Electronics), a conductive paint used for picture-tube aquadag (black paint on outside of picture tube used for ground). Squirt a tiny amount on a piece of paper and use a Q-tip (cotton swab) to drop on the pad."
(From: Mark Saterfield (kc4tzn@webtv.net).)

"Pens are available that come preloaded with conductive ink at local electronics stores though apparently not Radio Shack."
(From: Mike Harrison (wwl@netcomuk.co.uk).)

"It isn't the same as the silver stuff used for car screen heaters, etc., which I'd guess probably dries too hard and cracks off. It's made by Circuit Works, who also do conductive epoxies. Their part number is CW2610 for a repair kit, UK supplier is Farnell, price is UKP 22.33."
(From Rodney A Schmidt (rschmidt@iastate.edu).)

"What I used to remedy it was to use the stainless steel tape that is sold to seal ducting insulation, use a paper hole punch, and super glue the punched stainless onto the pad. I have had extremely good luck using this, and since the stainless is adhesive anyway, it stays in place while the super glue is drying."
(From: Luis Ortega (imagremlin@hotmail.com).)

"I tried using Permatex Quick Grid Rear Window Defogger Repair Kit (part number: 15067), which is easily available through the Internet and auto parts stores. My early attempts failed, they worked for a couple of days, and then the conductive paint would crack, peel off and make permanent contacts. Eventually I found three ways of making it work:

Use a paper match, soaked in the conductive material to "paint" the rubber pad, this resulted in a extremely thin coat. It does not crack.

Coat the pad with tipex first, allow to dry, then paint with the conductive material. It hasn't cracked after a couple of months.

My wife use nail paint first then the conductive material. Again, did not crack.

Different buttons my remote have been repaired using these techniques (for the sake of experiment!)."

(From: Bruce Curtis.)

"I have used graphite for lock lubrication to temporarily restore function to buttons but have found another method that so far seems to work far better since it is a more permanent repair.
I used some double stick tape and a piece of conductive rubber from a 3M 2209 Disposable Wrist Strap. The 3M 2209 is often included with electronic equipment cards but is also available for just a couple of dollars. In addition to several feet of conductive rubber, the 3M 2209 also includes a piece of adhesive copper foil that could potentially be used as well but I tested the conductive rubber first and haven't need to test using the copper foil."

Cracked Circuit Board
These can be repaired easily as the circuit boards are usually very simple, single sided, and have wide traces. Use Epoxy or an adhesive like Duco Cement(tm) or windshield sealer to repair and reinforce the circuit board. Scrape off any insulating coating and jumper breaks with fine wire and solder. Do not just bridge the gaps with solder as cracks and future problems are a certainty.
Bad IR LED
Test the IR LED(s) with an external power supply (with current limiting resistor) and IR detector and/or monitor voltage across them while operating. Substitute a visible LED and see if it lights up when keys are pressed. Use a scope to monitor the drive to the LED. You should see the pulse code modulated carrier. If faulty, replace with a readily available high intensity IR LED.
Note that strictly speaking, these IR emitters should perhaps be called Infra Red Emitting Diodes or IREDs since they produce no visible light. However, we will use the term IR LED throughout this document since its meaning is understood by the vast majority of readers.

Bad IC
If the remote uses a custom chip, throw it away! However, a failed chip is usually quite unlikely unless struck by lightening (now how would that happen?). Even accidentally inserting the batteries backwards (though definitely not recommended!) - which tends to kill many devices - may not cause any harm to a remote. Check each pin on the IC with a scope to determine if it is at least alive.
(From: Duane P Mantick).

"An awful lot of IR remotes use IC's from the same or similar series. A common series comes from NEC and is the uPD1986C which, incidentally is called out in the NTE replacements book as an NTE1758. A lot of these chips are cheap and not too difficult to find, and are made in easy-to-work-with 14 or 16 pin DIP packages. Unless you have no soldering or desoldering skills, replacement isn't difficult."
Dead Memory Capacitor
Some hand units have some type of device to hold the internal settings during the period when the batteries are removed for replacement. This may be a large conventional electrolytic capacitor or "supercap". The PCB marking will probably be a "C" number but who knows? If this device fails, any sort of behavior is possible. Simply check across it with a multimeter - there should be some voltage on it, probably equal or slightly less than that of the main battery, though a lower value is possible as long as it's not near 0 V. Replacements should be available.
WARNING: DON'T replace the memory capacitor with a battery as it is charged from the main battery when present. While the remote may appear to work this way, attempting to charge non-rechargeable batteries can result in unpleasant behavior. Although the risk of fire or explosion is probably low, why take chances?

Alternatives to Repair
There are a large variety of preprogrammed universal remotes available starting at $10. These are set up by inputting a code number for each type of equipment you will be using - TV, VCR, Cable box, etc. Don't loose the instruction manual or you will not know what codes to use if the batteries go dead or the remote looses its memory for any reason! Record the codes in pen on a label on the back of the remote and inside the battery compartment. For general TV/VCR/cable use, the $10 variety are fine. However, many will not provide special functions like programming of a TV or VCR or access to other model specific menu functions.
However, some of the One-For-All (and probably others as well) remotes do have capabilities not listed on the package (or web site). Check with the manufacturer (in the case of Universal, this can be via email) to determine whether any of their products have what is needed for your model(s).

Universal 'learning' remotes are available at slightly higher cost (perhaps, $25-100). The better ones are capable of memorizing all of the actual signals sent by your original remotes by viewing the IR transmission directly. Of course, your existing remotes must be working properly for teaching purposes. Make sure you get a money back guarantee with these as some may not be compatible with all equipment. The advantage of a learning remote is that it can be taught to perform setup, adjustment, and programming functions as well as those for normal operation. However the teaching process is likely to be tedious and time consuming and you will have to keep track of which buttons do what - possibly not worth the effort in the end. If the backup batteries should ever go dead, the entire learning process will need to be repeated.

(From: Michael Schuster (schuster@panix.com).)

"You can get most of the Zenith OEM remotes from MCM Electronics. These include some that were sold under the Gemini name as consumer items; their 4-device learning/preprogrammed remote was particularly nice).
These definitely =behave= as though they have EEPROMS; i.e. learned functions are retained indefinitely without power.

Also the upgradable one-for-all remotes from Universal Electronics (i.e. the ones with the 'magic' key) almost certainly have EEPROM since they can be customized by moving buttons around and assigning straight binary functions to keys not in the original pre programmed arrangement. Such customizations are also retained if power is lost."

(From: Dakuhajda (dakuhajda@aol.com).)

"Unfortunately RCA remotes cannot be repaired on any made after 1986. The circuit board is molded to the plastic case, only way to get the darn thing apart and you break it beyond being able to put it back together. Rca sells a universal remote control system link 5 that even has the pip feature. Usually $25. If you really want an exact match look inside the battery cover you can get the part number for the remote control, six digits, usually 221000 or similar. You can call any RCA authorized servicer and they can order it for you, or you can contact MCM electronics, Excel electronics, or any other authorized Thomson parts distributor. "
By the way the most expensive RCA universal remote that Wal-Mart sells I use in our shop for almost all but the very newest RCA TV sets. Last 2 years models.

(From: techman@niobiumfive.co.uk.)

Some universal remotes are better than others. I recently bought (here in the UK) one called "Wizard" made by Philex (a big manufacturer of replacement remotes). It has several levels of programming:

Manufacturer-based code numbers, which get you a basic level of functionality, similar to simple universal remotes

Key reconfiguration. Once (1) has been set, one can select a button and pressing it repeatedly causes it to issue sequentially all (?) codes with the same manufacturer part but varying the second part of the code. Once you hit the right one, you can save the code for that button (in flash). A bit tedious but good coverage.

It can learn the code from an existing remote, and save on any button.

All this can be setup for 8 different devices. Settings are saved in FLASH memory so you don't lose any programming when the batteries die. :-) It does has a few undocumented quirks, like setting a new manufacturer code seems to clear all existing "learned" codes. :-(

I bought it from Grandata (UK 0208-900-2329, international +44-208-900-2329) for GBP 16.50 + tax and postage.

I have also wired a phototransistor and an IR LED to the serial port on an old laptop, and experimented with turning that into a learning remote. I must say I was surprised at how many different coding schemes seem to be in use, just running through a) above and observing the waveforms I documented about 20 variations before I got bored. I got it working with my UK satellite "digibox" and with a JVC VCR, but haven't taken it much further. I was particularly interested that the VCR (HR-S4700EK) responds to two quite different coding schemes, presumably it was designed to be backward-compatible with some old code of theirs, but the newer code is required to get all the functions to work. A few codes do functions for which there is no button on the official remote (and are normally only accessible from buttons on the front panel!) One code wipes out all ones timer recording settings! :-(

Original Replacement Remotes
In some cases, the only realistic option is to obtain an original replacement remote control. This might be the case where special functions need to be easily accessible or you have fallen in love with the button layout, style, or decorator colors! If you need to access special functions on your equipment, a learning remote might be an alternative if you have access to a working remote control so you can teach it. However, learning remotes are rarely as convenient as the original. As for color, there is always spray paint!

Consider the original manufacturer of the equipment only as a last resort as they will likely want to charge you an arm and a leg (or more) for a replacement.
Panasonic has a web site you can enter your model number and get a parts list with list prices and part descriptions:

Panasonic Parts & Service Online

This site includes support for Panasonic, Technics, and Quasar consumer electronics. However, my quick visit only showed accessory type items (e.g., replacement original remote controls, cables, etc.). Encrypted credit card protection presumably makes it possible to order parts directly.

Electronics distributors like MCM Electronics do stock a variety of original remotes - prices range from $9 - $143 (Wow $143 for just a stupid fairly basic remote! It doesn't even have high definition sound or anything exotic. You can buy an entire VCR these days for less than $143 including its own remote!), The average price of these replacements is a still rather inflated $40.

Remote and Manual Service offers factory original remote controls from a large number of companies. I do not know how their prices compare with the manufacturer direct or with places like MCM Electronics:

Remotes.com, Phone: 1-800-REMOTES (1-800-736-6837).

Here is one that also appears to specialize in this area:

ReplacementRemotes.com, Remote controls, original remotes, universal remote controls, tv remotes, more, Phone: 1-336-969-1842.

They will also attempt to locate hard to find remotes.

And another. They also claim that most of the remotes they sell are factory original.

Remote Control Warehouse, Phone: 1-888-873-6683.

Back to IR Remote Repair FAQ Table of Contents.
Problems Not Due to a Defective Hand Unit
Problems with the Equipment
While circuit problems with the hand unit discussed in the section: Problems with Remotes are most likely, the following causes should not be overlooked if the remote does not work or has limited range:

Dirty IR window - The plastic sheet which covers the IR detector may be coated with dust, grease, grime, or tobacco smoke, or other wise damaged. If sensitivity has decreased even with a new set of batteries, this is a distinct possibility. It is not always obvious whether a particular type of dirt or damage will affect response. Some condensation may be totally opaque to IR while appearing transparent to visible light. On the other hand, I have a TV where someone must have cleaned the sensor window with sandpaper or a strong solvent - it is totally clouded over but works just fine with my $10 universal remote.
Test by removing the front panel if possible and direct the remote at the sensor directly. Inspect and clean the sensor window thoroughly with mild detergent and water.

Defective IR sensor, receiver electronics, or microcontroller can result in the equipment simply ignoring you and/or doing whatever it pleases. The first two of these can generally be tested without service information. However, if they check out, advanced troubleshooting will be required.
Borrow a replacement or universal remote to determine if the device responds with a known good unit. Check demodulated waveforms with an oscilloscope to confirm proper signal levels and reliable operation. See the section: Diagnosing the Problem as well.

Note that if this is a problem with new equipment (or if it has always been this way), don't neglect the obvious: Has the protective plastic film been removed? This is often present to prevent damage during manufacturing and shipping. It is amazing how many people neglect to remove this - I have gotten 10 year old TVs and VCRs at garage sales with this ugly film still in place!
And, there could be a design or manufacturing problem with your set....

While the IR-receiver module inside that TV may be a mature component and may function well on the test bench, it is entirely possible that the TV manufacturer has made a (design) fault in applying it. An IR-receiver is a very sensitive device, and a television is a very dirty environment. This may be a case of an EMC problem, not an optical problem. Under the right conditions, with this type of IR-transmitters and IR-receivers, distances of 100 feet or better may be crossed...

But, this should not be the customer's problem. The service organization of the TV manufacturer is the proper place to obtain a fix. The complaint is valid and it should be cured.

Problems Due to Interference
Symptoms for the following may range from no, intermittent, or incorrect response or greatly reduced range to the equipment being possessed - a TV changing channels, volume, or powering itself on and off as though being controlled

by a poltergeist. (Where the problem is due to more than one piece of equipment interacting, see the next section.) These are likely possibilities if you have just changed your room layout or added something to it:

Interference from another remote in the same room which is defective (or is being squashed by a gorilla). Make sure there are no other IR transmitters including those like the a VCR+ or remote repeater that might be activated accidentally due to faulty programming or something pressing on the buttons. Do you know where all your remotes are hiding?
A neighborhood kid (or adult with the maturity of a kid) may be playing tricks on you from outside your window or even across the street. It doesn't take much (a lens) to extend the effective distance over which a universal remote will operate reliably.

Cover the sensor of the misbehaving equipment with a piece of black tape to see if the problem goes away. Then round up your other remotes (and/or other animate objects) and discipline them!

Fluorescent lamps using electronic ballasts - These may be newer ceiling fixtures or the energy efficient compact fluorescents used as replacements for the regular light bulbs in table lamps. The electronic ballasts are switching power supplies and these may result in modulation of the light intensity at high frequencies confusing the remote control receiver.
Turn off all fluorescent lamps to see if the problem goes away. A cardboard baffle can be taped to the sensor to block the interfering light. Try a different brand of compact fluorescent as not all cause interference.

Bright lights in general - Enough ambient light, be it from the Sun or a 1000 W flood may overload the sensor. Ceiling fans can sometimes modulate the light with their fan blade rotation or vibration of the filaments of the bulbs which can confuse the remote control receiver and microprocessor.
Turn off the lamps or move the Sun to see if the problem goes away. A cardboard baffle can be taped to the sensor to block the interfering light. Simply changing the orientation of a lamp shade or slightly moving one of components may be all that is needed.

Electrical interference from nearby equipment. Inadequate shielding in the sensor electronics could result in susceptibility to RF emissions from other gear.
Turn off suspect devices. If the problem goes away, they will need to be moved to another location. Shielding is probably not a viable option.

Where Multiple Pieces of Equipment Use the Same Codes
It sometimes happens: A second VCR or TV, even if from a different manufacturer, may use exactly the same remote coding. Where there is no unit select switch on the device and hand unit, only careful aiming (possibly with a set of blinders!) will allow control of one at a time.
There are three ways to solve this problem: changing the wavelength of the light, the modulation frequency, or coding used by the remote. Only the first of these is likely to be realistically possible without major effort and would involve replacing the IR LED(s) in the hand unit with visible ones (red, yellow, or green) and replacing the IR passing filter on the controlled equipment with one selective for the visible wavelength. The silicon sensor in the remote receiver probably will work just fine for visible light. A colored piece of cellophane or plastic may be adequate for the filter. Using a green LED may be best since its wavelength is furthest away from the IR wavelength making the filtering easier.

I have not actually tried this stunt but there is no fundamental reason why it shouldn't work. However, some experimentation may be required to find a suitable high brightness LED and to match it to driver in the hand unit since

the LED's voltage drop will be different and may require changing a resistor. And yes, with care, it should be possible to extend this approach to 3, maybe even 4 devices. Multicolored remotes might be kind of cool. :)

Forgot Your Universal Remote Setup?
Hopefully, you saved the instruction manual. No? Some universal remotes like the Zenith Allegro have an 'auto search function' which will sequence through all possible codes. You then push a button to lock in the proper settings when the TV or VCR's channel or power status changes. Of course, since you don't have the instruction manual, you likely don't know how to use this feature either!
The manufacturer of the remote control is the next likely source (after the instruction manual) for the codes and other information. However, there is a good chance that one of the following web sites may be able to help you:

Memorex has a web site at:

Memorex.com

But they suggest using the technical support line (800-636-8352) for remote control programming and other Memorex consumer electronics questions.

The RCA Web site used to have complete user manuals for their universal remotes. Maybe they still do but navigating that site is so confusing with multiple 404 errors that I gave up. However, I was told that you should go to: "Shop RCA", then "Accesories", then "Universal Remote Controls", then the model in question. The PDF link to the owner's manual is at the bottom of the page listed as "Owner's Manual". Maybe. :)

RCA Electronics

Remotes has extensive info on both Radio Shack and One-For-All brand remotes. This Web site may be more stable than the ones provided by the manufacturers.

The Sony Web site has detailed programming codes and some troubleshooting info for some of their universal remotes:

Sony Consumer Electronics Guide - Remote Control Solutions

Universal Electronics, makers of the One-For-All(tm) line of universal remote controls (and other products) has a web site:

Universal Homepage

There is complete info on programming and special functions for many models. Since other universal remotes may be rebranded One-For-Alls, this information may be useful for those as well.

US Electronics, makers of a variety of universal remotes (1-in-1 CATV, 2-in-1 Universal, 3-in-1 Universal, 4-in-1 Universal, ABC (Promote series), etc.) has a web site:

US Electronics Homepage

There are complete specifications and setup instructions for most of their products (with the rest coming soon).

Zenith has an extensive web site with product specifications for many of their audio/video products. Gemini remotes (e.g., Easy-3) are made by Zenith. There is nothing there at the present time but indications are there may be remote information in the near future.

Zenith Homepage

And here is another one:

xDiv's Universal Remote Control Codes

Next time, make copies of the instruction manual(s) and put them in obvious places like taped to the back of the TV or inside the entertainment cabinet.

Better yet, print the specific instructions and/or codes on a slip of paper and stuff it into the battery compartment of the remote. Or tape the info to the back and then cover with clear tape to protect it from wear.

One of the primary axioms of life is that you will lose those instruction manuals. :-)

Code search Programming of RCA SystemLINK Remote Controls
Perhaps this is your lucky day and this is the type of remote you have that is in search of an instruction manual.
I know this procedure works for models 3 and 4+ and assume it to be similar for the others.

(From: Larry Sabo (sabo@storm.ca).)

Make sure the device you are programming is turned off.

Press and hold CODE SEARCH.

Press and release TV, VCR, or CABLE corresponding to the device to be controlled. The indicator light will flash once to indicate the search is enabled.

Release CODESEARCH.

Press OFF/ON repeatedly until the device turns on.

Press CHANNEL V (channel down) for verification. DO NOT press any other buttons at this time.

If the channel changes on the device, the code is valid. Press ENTER to complete the search.

If the channel does not change, turn off the device (without attempting to use the remote). Then continue search by repeating steps 5-6. When all codes have been searched, the indicator light will flash twice and the remote will return to the normal mode.

(From: Aldrich TV, Inc. (aldrichtv@centuryinter.net).)

"I find it works better if you have the unit on and watch for it to go off. It is easy to miss it coming on and then you have already passed the proper code and have to start over."

Back to IR Remote Repair FAQ Table of Contents.

IR Items of Interest

Increasing the Range of a Remote Control or IR Data Link

For operation between rooms, a repeater is best - an IR receiver that sends the data over a cable to an IR transmitter in the other location. This would require an IR receiver module similar to the one found in a TV or VCR, buffer to drive the cable, and a IR transmitter modulated at the appropriate carrier frequency (around 40 kHz typically).

If extra distance or sensitivity is needed in the same room, it may not be too hard to replace the IR LEDs in the hand unit with more and/or higher power devices (though the IR LEDs used originally are generally quite powerful) but this would require some circuit hacking and possibly some reverse engineering of the design to determine what is possible. A small convex lens over the IR window on the receiver will help as well but will reduce the angle to the receiver over which response will be reliable. This would be suitable if you always use the equipment from a fixed location like a couch at the opposite end of the room.

Where the transmitter and receiver are both in restricted locations, a short focal length convex collimating lens can be added to the transmitter as well as the receiver. The angular coverage of both receiver and transmitter will be reduced but the range will increase. Reducing the beam divergence by a factor of 2 at the transmitter will increase the range by approximately a factor of 2. Doing this at the receiver as well will add another factor of 2. Several hundred feet should be possible with very inexpensive lenses. I would suggest a lens of around 1 inch diameter with a 1 inch focal length. This is not critical but an IR detector circuit or card should be used to help set up the proper distance to the transmitter IR LED and receiver photodiode.

Remote Remotes (Remote Extenders)

In some situations, it is desirable to be able to operate a remote controlled piece of equipment from another room - where a direct line-of-site path does not exist. One example of this would be to control a stereo receiver in the living room (which has speakers wired all over the house) from a bedroom.

There are a number of ways of implementing this:

RF - An IR receiver in the bedroom retransmits the codes over on a radio frequency carrier to an IR transmitter in the living room.

Hard-wired - An IR receiver in the bedroom converts the IR to TTL (or other electrical) pulses wired to an IR transmitter in the living room.
Where at least one video cable exists between the two rooms, a variation on this theme uses a combination of the coax shield and earth ground to send the signal between the rooms.

House wiring - An IR receiver in the bedroom modulates a carrier injected into the AC wiring. An IR transmitter picks off the signal from the AC wiring.
In all cases, the IR receiver should be a module that includes automatic level control and generates a logic level output. If possible, it should NOT demodulate the IR signal so that the frequency of the carrier is maintained. The IR transmitter then only needs to convert this logic level to on-off IR pulses. Widgets based on all of these schemes are available commercially.
(From: Robert Scott (Robert.Scott@ncl.ac.uk).)

One of these circuits exists at:

ftp://ftp.ee.ualberta.ca/pub/cookbook/optic/irrepeater.tar.Z

(From: Francis VE2FGS (sonytech@videotron.ca).)

I personally have small pyramids called "Powermid" made by X-10 which work fine.

Those come by pair, one transmitter and one receptor. You plug them in 120 VAC wall outlet and it transmit signals between the two pyramids with FM signals. It work very fine and I think it's the most practical, cheap, and fast way to transmit IR signals from one room to another.

I paid about $40 (Canadian) for the pair.

Controlling TVs, VCRs, CDs, etc., From a PC
(From: Donald Hoffman (dhoffman@epix.net).)
I know of 1 link to such devices. Try:

The B.I.R.D. Computer Controllable Learning IR Remote

IR Signal Transmission and Coding
Modern remotes use a pulse code modulated carrier to send the command. Typical carrier frequencies vary between roughly 36 and 56 kHz (although rumor has it that Bang and Olefsun remotes may use 455 kHz for the actual IR carrier - I have not been able to confirm this). Each pulse or bit consists of multiple cycles (e.g., 32) of this carrier. Here are approximate measurements made of the general characteristics of some typical remotes:

Model	Carrier	Cycles/bit	Repeat rate
Emerson VCR	36 kHz	32	10 Hz
Mitsubishi VCR	38 kHz	10	20 Hz
Panasonic VCR	56 kHz	48	10 Hz
RCA TV	56 kHz	28	16 Hz
Sony CD	40 kHz	24/48	20 Hz
Sylvania TV	36 kHz	32	10 Hz
Technics CD	56 kHz	48	10 Hz
Toshiba VCR	38 kHz	20/320*	9 Hz

Yamaha receiver	38 kHz	20/320*	9 Hz

For buttons that repeat, typical rates are 10 to 20 Hz and the entire code may actually be sent only when the button is first pressed with only a 'repeat' code sent while it is held down. (* This extra length 'bit' was evident in the repeat code for the Toshiba VCR and Yamaha receiver - which both seemed to use very similar coding schemes. Repeat for all keys used a 320 cycle bit followed by an 80 cycle gap and a 20 cycle bit.) It would appear that various combinations of NRZ, RZ, PWM, and others are used depending on manufacturer and model. Think of the challenges involved in designing a universal remote!
The carrier frequency and coding schemes (these are even more varied than the table above would indicate) have apparently not been standardized. They may also vary quite a bit even different models of equipment from the same manufacturer. Therefore, it is beyond the scope of this document to enumerate them all. It is possible to see these types of waveforms with an oscilloscope by monitoring internal signals of the remote including certain pins on the controller IC as well as the IR LED or its driver or across the transistor of the IR detector circuit (see the section: IR Detector and Related Circuits).

Capturing Remote Control Codes
(From: Dez Ellis (dezellis@lineone.net).)
Check out ZipLabel.com Computerized Infrared Remote. They have a very cheap and cheerful method of obtaining IR codes. DOS software is provided for textual or binary capture of remote control codes. Windows software for the device is also linked to the site. The Windows software "Monster Clicker" allows you to create any number of virtual remote control functions. This software also has full Macro facilities. It is well worth a visit for the small amount of construction required this is an excellent option.

Links to IR Related Web Sites
The sites below have quite a bit of information on IR remote data transmission, coding schemes, various circuits. There are even tables of formats for the remotes from a number of manufacturers:

Tomi Engdahl's IR Remotes Links Page
SIRCS and other IR Remote Info and Links

Here is an even more extensive list:

(From: Joe Krantz (joed.krantz@symbios.com).)

http://www.celadon.com/Consumer/consumer.html#TOP OF CONSUMER
http://www.asihome.com/
http://www.homecontrols.com/
http://www.irda.org/
http://www.techmall.com/

(From: Tomi Holger Engdahl.)
Almost all you can find free from the net you can find linked from

http://www.epanorama.net/links/irremote.html.

Here is a site that appears to have a lot of more or less non-commercial info on medium to high end (they say) remote controls from various manufacturers including detailed coding and other technical details:

Remote Central

And Web sites with extensive information on remote control codes:

LIRC - Linux Infrared Remote Control
WinLIRC - Windows Infrared Remote Control
Sourceforge.net Index of Remotes with Control Codes

Back to IR Remote Repair FAQ Table of Contents.
IR Detector and Related Circuits
IR Detector Circuits
Two approaches are shown below.
The first uses a bare photodiode as the sensor. It is simpler, lower power, and shouldn't care what, if any, modulation is used by the IR source.

An IR detector module salvaged from a TV or VCR, or purchased from Radio Shack or elsewhere may be used instead of a photodiode. This will have a much greater dynamic range (response to both weak and powerful signals) than a simple photodiode. However, some of these assume a particular modulation frequency and will be blind to anything else. Power requirements may also be more restrictive - it may insist on regulated 12 V).

IR Detector Circuit Using Bare Photodiode
This IR Detector may be used for testing of IR remote controls, CD player laser diodes, and other low level near IR emitters. It will not have the sensitivity or dynamic range of the approach described in the section: IR Detector Circuit Using IR Receiver Module but will respond to all sources of IR falling within the wavelength range of the photodiode used since there is no demodulation or coupling circuitry to get in the way.
IR radiation falling on the photodiode causes current to flow through R1 to the base of Q1 switching it and LED1 on.

Component values are not critical. Purchase photodiode sensitive to near IR - 750-900 um or salvage from optocoupler or photosensor. Dead computer mice, not the furry kind, usually contain IR sensitive photodiodes. For convenience, use a 9V battery for power. Even a weak one will work fine. Construct the circuit so that the LED does not illuminate the photodiode!

The detected signal may be monitored across the transistor with an oscilloscope.

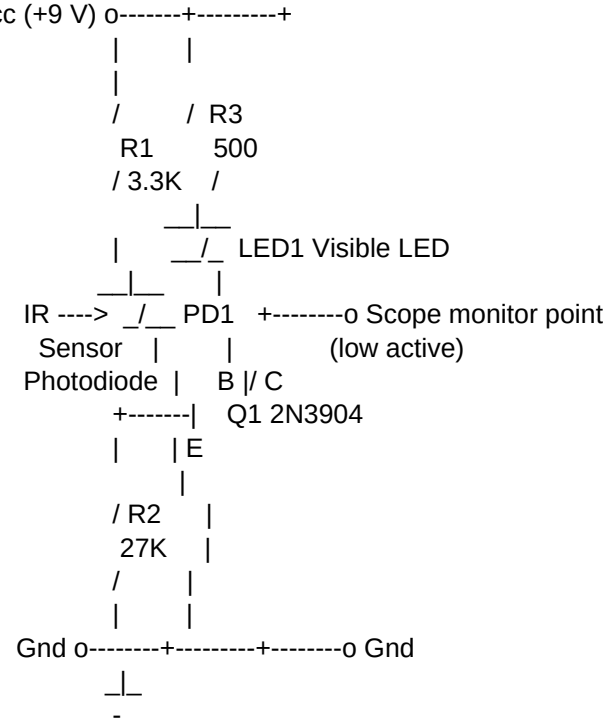

IR Detector Circuit Using IR Receiver Module

This one uses an entire IR receiver module as the IR sensor. Its sensitivity and dynamic range will be much better than the circuit described in the section: IR Detector Circuit Using Bare Photodiode since these modules have automatic gain control circuitry built in. However, some modules are tuned to a particular modulation frequency and/or are AC coupled and will not respond to all remotes or other pulsed or continuous IR sources.

The IR receiver module from a TV, VCR, or purchased from Radio Shack or elsewhere, drives the base of Q1 through R1. It may even be possible to eliminate the transistor circuit entirely and connect the LED directly to the module's output (in series with a current limiting resistor to Vcc or Gnd) but that depends on the drive capabilities of the module. You can use whatever Vcc is required for the IR receiver module for the LED circuit as well but may need to change the value of R2 to limit the current to the LED to less than its maximum rating.

The specific case where Vcc is +5 V is shown.

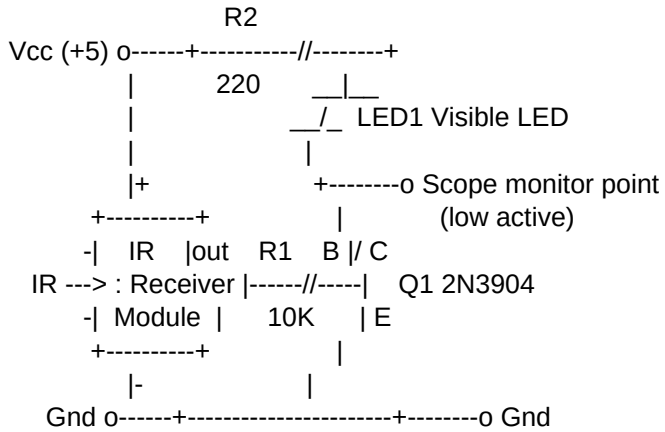

Steve's Instant IR Tester

(From: Steve Rice (punky@efortress.com).)

IR receiver diode (from scrap Penney's unit) attached to 18" single pair wires-passed through heavy-gauge straw (from some unknown latte drink in the early A.M.). RTV the tip to maintain rigidity. Positive end to plus end of 9 V battery. Negative end to 330 ohm 1/4 W resistor, and from there to display LED (I chose a pretty red one from the scrap box), and then back to negative of battery.

Time consumed: 2 hours. (1 hour to make sure the RTV was cured properly.)

Application to numerous remote control sources and to a couple of CD pickups provided nice glow from the indicator LED.

I just received a Fisher 25 disc unit for repair, and the above tester was instrumental in determining that over 12 IR emitters were functional. (Some of these were in locations otherwise very difficult to access.)

Some Alternative 'Quick and Dirty' Remote Testers

In addition to the IR detector circuits, IR detector card, and camcorder, video camera, or digital camera here are a few other options:

(From: Raydon Berry (rayberry@pt.lu).)

Measure the current consumption from the batteries. Put the multimeter on a range of about 25 mA and when you press each button, the code being sent will show up as a wagging needle on a VOM or an average current for a DMM. If the ceramic filter or the IR diodes have failed, the current remains very low, but if OK, you should see pulses of 5 to 10 mA.

(From Malik (M.dad@mmu.ac.uk).)

"If you have a IR remote TV in the workshop for testing VCRs and other video equipment, you can modify this so that audio can heard from the speaker which represents the IR signal.

Simply couple the output of the IR receiver (in the TV) to the input of the audio output stage. Use a low value ceramic cap and a high value resistor, this should be possible on all remote TV's and will cost you next to nothing."

(From: ShyGuy4Yu (shyguy4yu@aol.com).)

"Take a known good IR receiver from an old set. Supply proper DC to it. Feed the output into an audio amplifier. You can hear intermittent operation really well without squinting at test equipment. Put one on the counter for demo to customers.. Great!!"
(From: Sam).

What a nice idea! The only concern I would have is that not all IR transmitters use the same modulation frequency so I don't know how forgiving the demodulator in the IR receiver would be. Thus, you might think a remote control is bad when in fact it is just incompatible.

You could probably learn to recognize the codes by ear after a while as well! :-)

(From: Paul Grohe (grohe@galaxy.nsc.com).)

"Here is a another "quick" and "very dirty" test of the IR emitter I have used:
Clip a *glass* encased diode (1N34, 1N914, 1N4148, etc.) between your scope probe tip and ground clip. Crank the scope sensitivity up to about 20 tp 50mV/div. Hold the diode by the grounded lead (to reduce noise pickup).

Point the "business" end of the remote directly at the clear part of the diode body. The IR packets will now be visible on the scope.

You may have to move the remote around to find the "hot spot" in the window. The more of the diodes junction that is exposed, the better the response.

A Sony remote generates about 50mVpp with a typical 1N4148/1N914 and more than 200mVpp with a "wide open" 1N34A point-contact Germanium (at 1 cm).

BTW, the time constant of this setup may mask the actual 40kHz carrier pulses. Place a 100k resistor in parallel with the diode to see the individual pulses clearly (sensitivity *is* reduced).

Or just simply hold the remote against an AM radio for a quick test."

(From: Sam)

And, Filip also suggested that last one so I will honor him as well. :-) Almost any sensitive amplifier may pick up some clicks from a working remote. A guitar or microphone amp may work for this. However, none of these indirect methods actually test the IR output but probably are accurate enough in most cases.

(From: Filip M Gieszczykiewicz (filipg@repairfaq.org).)

"Simply hold a pocket AM radio or Walkman set on AM and push the buttons. This works for all the remotes I have.... except the ultrasonic one. :-)"
(From: Bob Quackenbush (quackenb@heidelberg-emh11.army.mil).)

"Tune an AM radio to a quiet area of the band, hold the remote near the (normally internal) antenna, press and hold any key on the remote. The sound will be a quiet fluttering, so listen carefully. Be careful with your interpretation of the

results. "No flutter" may NOT mean that the transmitter isn't working."
(From: David C. Brink (db@mcs.com).)

"Just dissect the remote far enough to get access to the IR LED(s) leads (if the remote has been through the moving bits of the Lazy-Boy a few times, such disassembly might not even be necessary). Hold a LED in parallel with it and see if it lights when you press the remote buttons."
(From: Sam)

Note: Since the voltage drop across an IR LED is usually less than that across a visible LED, this may not work unless the remote uses two LEDs in series. In that case, substitution may be needed.